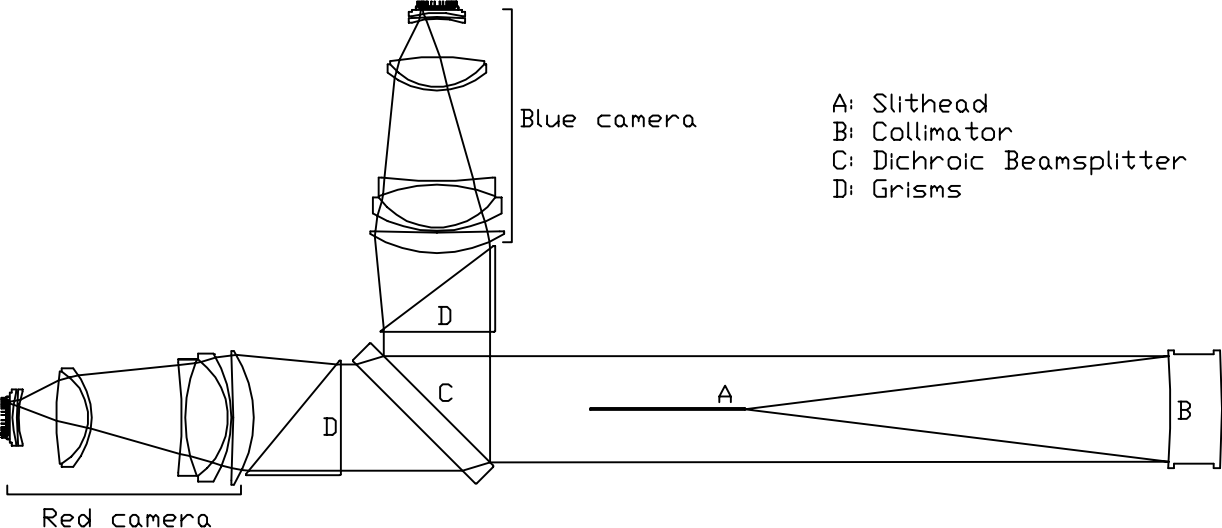
Blue camera
A: Slithead
B: Collimator
C: Dichroic Beamsplitter
D: Grisms
D
C
A
B
D
Red camera